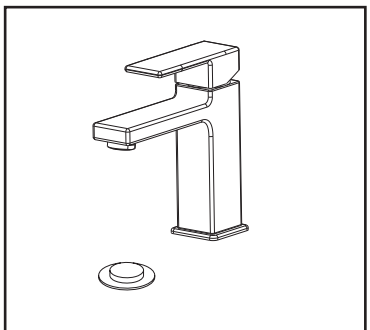

BA-600-01

BATHROOM FAUCET

- Capri Collection
- Single Handle

STANDARD SPECIFICATIONS:

- Max flow rate: 1.2gpm @60 psi, 4.5 L/min @ 414 kPa
- "Lead Free" brass body, spout, and cartridge seat. Stainless steel shanks and zinc handles
- Neoperl brand aerator
- Ceramic disc cartridges
- Includes matching push-pop-up drain and base plate
- Deck mount installation
- Hole mount: 1
- Includes: 27" (692mm) long PEX + SS304 braided supply line hoses with a 9/16 UNEF (3/8") connection
- Maximum deck thickness: 1.97" (50mm)

WARRANTY:

- **Consumer Purchasers - Parts and Finish:**
  Lifetime Limited Warranty; Lulani warrants our faucets (sold in or delivered into the United States or Canada on or after the original date of sale) for as long as the original consumer purchaser owns the product and lives in the residence in which the product is first installed (the "Warranty Period" for homeowners), will be leak and drip-free during normal use and all parts and finishes of this faucet will be free from defects in material and manufacturing workmanship.
- **All other purchasers (including purchasers for industrial, commercial, rental and business use) - Parts and Finish:**
  Limited 5-Year Warranty; Lulani warrants our faucets for a period of five (5) years from the original date of purchase (the "Warranty Period" for non-homeowners).
- **Electronic Parts (other than batteries and if applicable):**
  Lulani faucets are warranted to be free from defects in material and workmanship for five (5) years from the date of the original purchase or, for commercial purchasers, for one (1) year from the date of the original purchase.
  No warranty is provided on batteries.

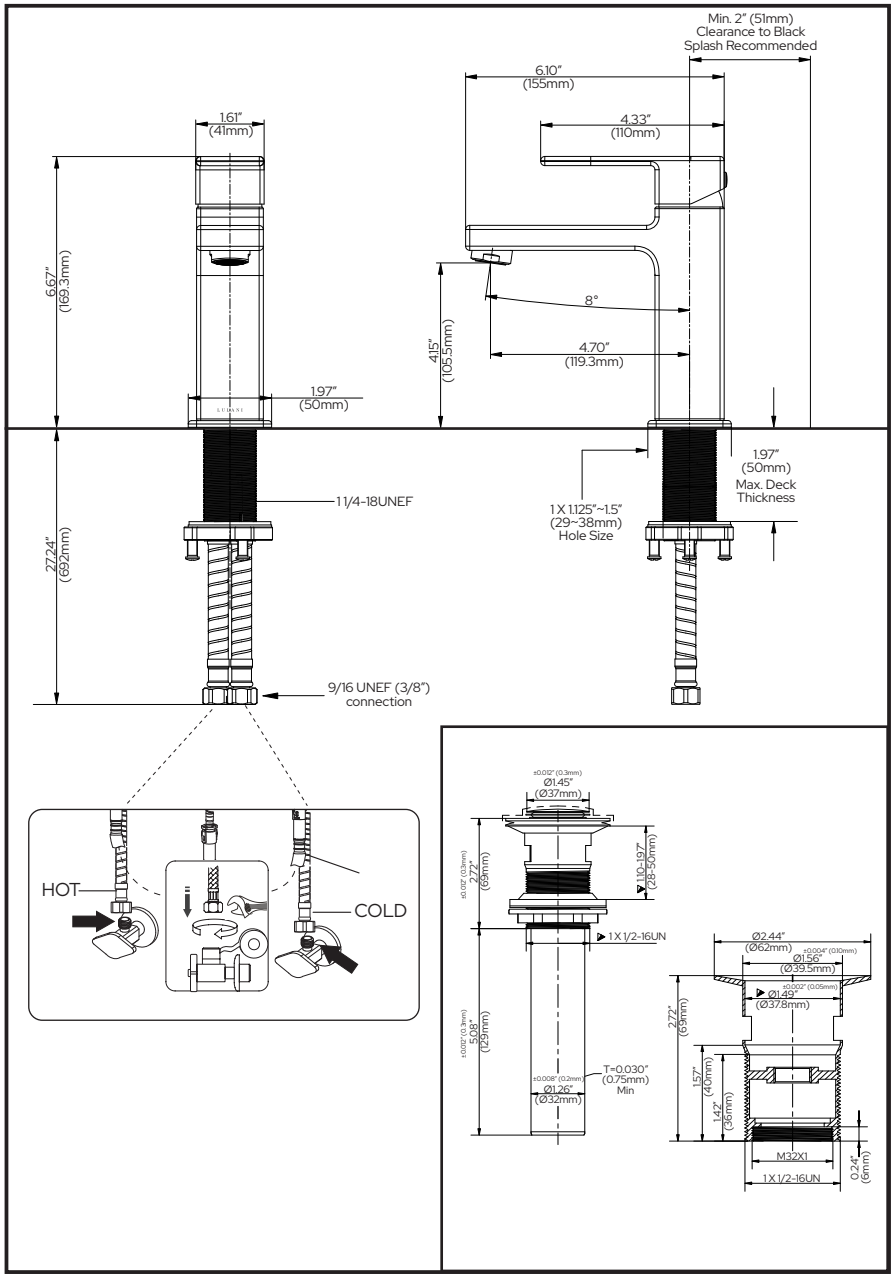

▲ Designate proper finish suffix

ASME A112.18.1 / CSA B125.1
NSF61, NSF372
≤1.2GPM (4.5L/min)max

Lulani reserves the right (1) to make changes in specifications and materials, and (2) to change or discontinue models, both without notice or obligation. Dimensions are for reference only. See current full-line price book or www.lulani.com for finish options and product availability.

Lulani LLC
1945 Camino Vida Roble Ste. J
Carlsbad, CA 92008
(760) 536-5160
www.lulani.com